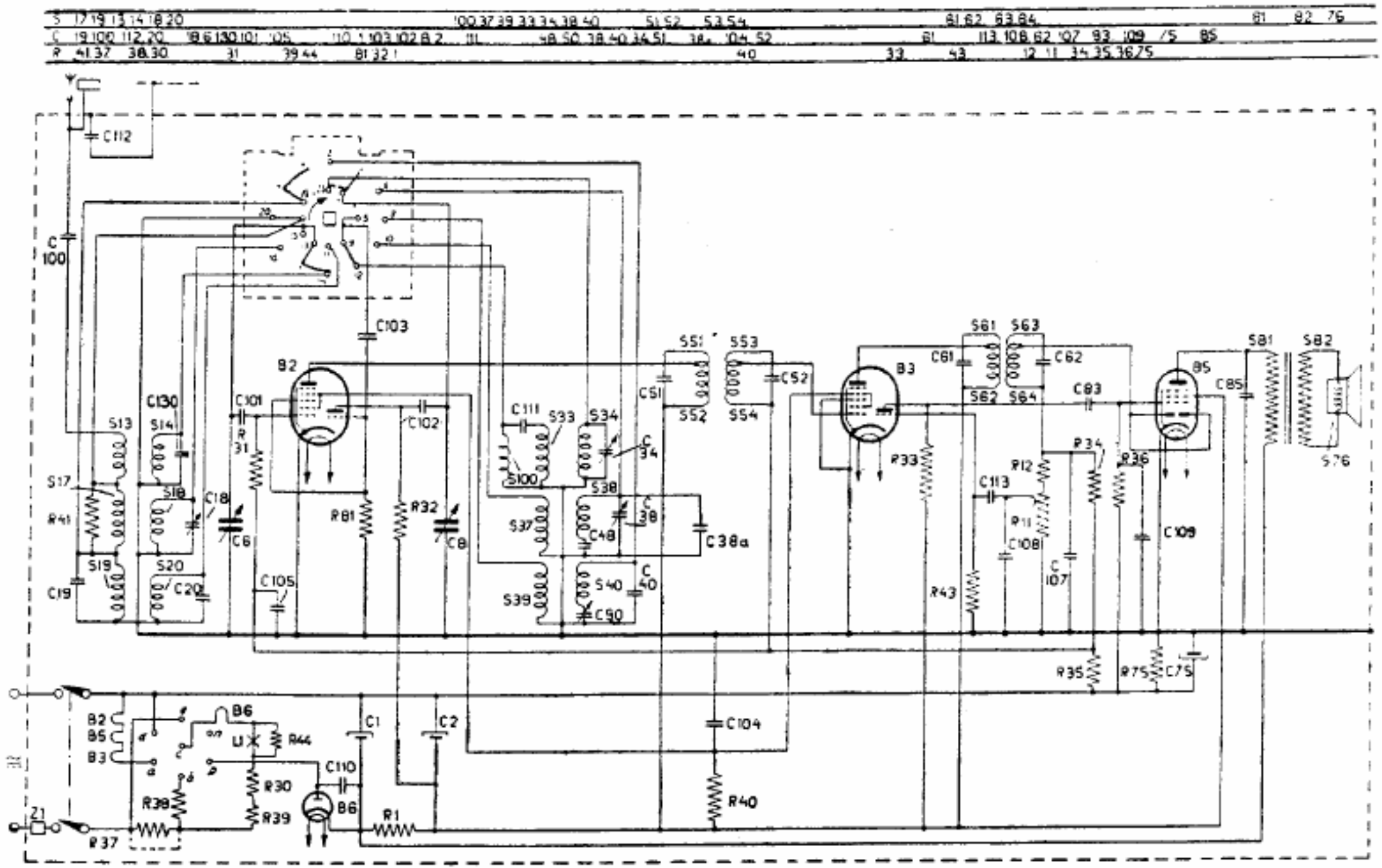
S 17 19 13 14 18 20 100 37 39 33 35 38 40 51 52 53 54 61 62 63 64 81 82 76
C 19 100 112 20 98 130 101 105 110 103 102 8 2 111 48 50 38 40 34 51 36 104 52 61 113 108 62 107 93 109 75 85
R 41 37 38 30 31 39 44 81 32 1 40 33 43 12 11 34 35 36 75
C112
C 100
C103
B2
C130
C101
C102
S13
S14
S17
S18
S19
S20
R41
C19
C20
C18
C6
C8
R31
R81
R32
C105
C111
S33
S34
S100
C 34
S38
C 38
S37
C48
C38a
S39
S40
C 40
C90
S51
S52
S53
S54
C51
C52
B3
S61
S62
S63
S64
C61
C62
C83
R33
R12
R11
C113
C108
C 107
R34
R36
R43
B5
C109
C85
S81
S82
S76
R35
R75
C75
B2
B5
B3
B6
U
R44
R30
R39
R38
R37
Z1
C110
B6
C1
C2
R1
C104
R40

F.I. = 452 Kc.